Industrial Air Hoists TAH

Tiger industrial air hoists are designed for, and proven in, many industries including mining, shipyards, offshore construction and power stations. They are also used for industrial and general engineering applications such as automotive plants, foundries, and heat treatment plants. The hoists operate at air pressures of between 4 and 6 bar. They comply with the requirements of ASME B30.16 and EN1L11192-2. Our manufacturing facility is 1S09001, 5014001 & OHSAS18001 certified.

- Range - 0.25t to 20t
- Reliable, fast, efficient, quiet and lightweight
- Greater than 5:1 factor of safety
- Suitable for Fleeting/Oblique pulling





More features of Tiger Air Chain Hoists

Load Limiter

Integral differential pressure load limiting valve automatically prevents the operator lifting a load of more than 125% of the working load limit. Load limiter is 100% repeatable at all working pressures and does not wear or generate damaging heat.

Emergency Stop

Pendant control hoists are supplied with a main emergency stop valve. This shuts off the main air supply to the hoist when activated.

Pendant Control Options

Our air hoists are supplied with either aluminum hard anodised controls which offer excellent corrosion protection or our Nickel plated SG iron option (for higher impact resistance combined with greater tensile strength and superior corrosion protection). Twist grip pendants are available as an option. **Our new dual control pendant will operate two hoists with one pendant control. We also have a new remote control option available.**



Aluminum Hard Anodised Pendant



Nickel Plated SG Iron Pendant



Optional Twist Grip Pendant



NEW Dual Hoist Pendant



NEW Remote Control

More features of Tiger Air Chain Hoists

Fleeting, Cross Hauling or Oblique Pulling

This type of application is when the load deviates from the vertical position with a force acting directly between load hook and suspension point. Our air hoists can be used for fleeting and oblique pulling operations with no de-ration of the hoist. Cross hauling can be done with a single hoist, two hoists operated independently or with two hoists operated off one dual hoist pendant control.

Temperature Range

Ambient temperature range -20ºC to +70ºC (-4ºF to +158ºF) (for temperatures outside of this range please contact us for details).

Precise Control

Accurate and precise positioning of loads is standard for both toggle and pendant control models.

Fail Safe Disc Brake

Non-asbestos self-adjusting disc brake is applied automatically when the air supply to the hoist is shut off. The brake is self-adjusting for the life of the brake and can hold more than 125% of the working load limit.

Integral Silencer

The exhaust air silencer is built into the hoist gearbox housing and limits the noise level to below 85dB(A).

Load Chain

Grade 80 load chain ensures stringent high-speed duty cycles can be met. The load chain is in accordance with the requirements of EN818-7 Appendix B.

Vane Motor

Assisted vane lifting ensures maximum starting torque when starting under load.

Sealed Gearbox

The sealed planetary gearbox ensures that the most stringent duty cycles can be met. The gears are heat treated and mounted on high strength, low friction bearings.

Ease of Maintenance

The modular design of the hoist allows easy access to internal components such as the motor, gearbox, brake and load limiter. Common parts are used throughout the range.

Optional Chain Carrier

Designed to carry and hold the length of load chain required for the operation, our stainless steel chain bucket is available in different size options. These chain carriers prevent loose chain from getting snagged during lifting or lowering operations and protect any loose chain during transit to and from the operational site.



MADE IN SOUTH AFRICA

Industrial Air Hoists TAHS



TAHS-002

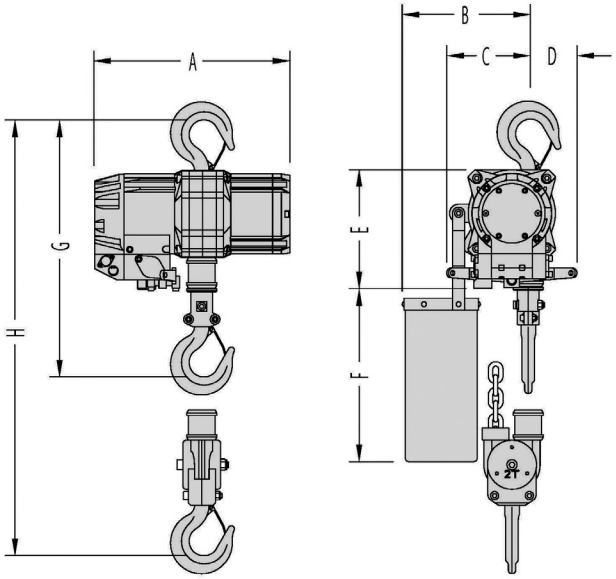

Product Code	Capacity (tons, T)	Falls of Chain	Chain Size (mm)	Total Weight (kg*, lbs)	Full Load Lifting Speed (m/min, ft/min)	No Load Lifting Speed (m/min, ft/min)	Full Load Lowering Speed (m/min, ft/min)	No Load Lowering Speed (m/min, ft/min)	Air Con-sump-tion (m^3/min, cfm)	Air Con-nection	Supply Hose (Inside Ø) (mm, in)	Sound Level (dB(A))	Dimensions (mm, in)							
													A	B	C	D	E	Min F	Min G	Min H
TAHS-002	0.25, 0.27	1	7.1x21.2	25.0, 55	22.5, 73	32.0, 105	31.0, 101.5	25.0, 82	2.1, 74	NPT½	16, ¾	76	312, 12.3	216, 8.5	135, 5.31	85, 3.3	196, 7.7	370, 14.5	420, 16.5	-
TAHS-005	0.5, 0.55	1	7.1x21.2	25.0, 55	15.0, 49	29.5, 97	36.0, 118	23.0, 75	2.1, 74	NPT½	16, ¾	76	312, 12.3	216, 8.5	135, 5.31	85, 3.3	196, 7.7	370, 14.5	420, 16.5	-
TAHS-010	1.0, 1.1	1	7.1x21.2	25.0, 55	7.5, 25	16.0, 52.5	20.4, 67	13.0, 42	2.1, 74	NPT½	16, ¾	76	312, 12.3	216, 8.5	135, 5.31	85, 3.3	196, 7.7	370, 14.5	420, 16.5	-

*Weight of TAHS model includes 3m/10' lift, 2m/6.5' toggle control. For longer lifts add 1.1kg/.75lbs for TAHS-002, TAHS-005, and TAHS-010 models and 2.2kg/1.5 lbs for TAHS-020 per meter/foot of lift. For pendant control add 0.8kg/0.5 lbs. per meter/foot.

Industrial Air Hoists TAH21



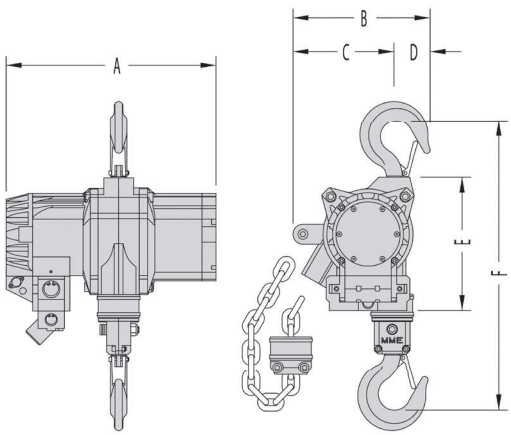

1.5 and 2.0t

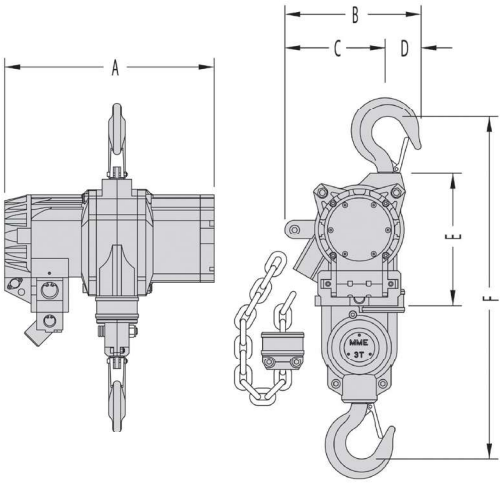

3.0t

Product Code	Capacity (tons, T)	Falls of Chain	Chain Size (mm)	Total Weight (kg*, lbs)	Full Load Lifting Speed (m/min, ft/min) @ 6 bar	Full Load Lifting Speed (m/min, ft/min) @ 4 bar	No Load Lifting Speed (m/min, ft/min) @ 6 bar	Full Load Lowering Speed (m/min, ft/min) @ 6 bar	No Load Lowering Speed (m/min, ft/min) @ 6 bar	Air Con-sump-tion (m^3/min, cfm) @ 6 bar	Air Con-sump-tion (m^3/min, cfm) @ 4 bar	Air Con-nection	Supply Hose (Inside Ø) (mm, in)	Sound Level (dB(A))		Dimensions (mm, in)					
														Full Load Lifting @ 6bar	Full Load Lowering @ 6bar	A	B	C	D	E	Min F
TAH21-015	1.5, 1.65	1	10x28	55, 121	6.2, 20	4.2, 14	8.7, 28.5	8.6, 28	7.5, 25	92, 2.6	60, 1.7	NPT¾	19, ¾	81	83	382, 15	250, 9.8	184, 7.25	66, 2.6	213, 84	515, 20.2
TAH21-021	2.0, 2.2	1	10x28	55, 121	5.3, 17	3.0, 9.8	8.7, 28.5	9.0, 29.5	7.5, 25	92, 2.6	60, 1.7	NPT¾	19, ¾	81	83	382, 15	250, 9.8	184, 7.25	66, 2.6	213, 84	515, 20.2
TAH21-032	3.0, 3.3	2	10x28	67, 148	3.1, 10	2.1, 7	4.3, 14	4.3, 14	3.7, 12	92, 2.6	60, 1.7	NPT¾	19, ¾	81	83	382, 15	250, 9.8	184, 7.25	66, 2.6	213, 84	610, 24

*Weight of TAH21 model includes 3m/10' lift, 2m/6.5' toggle. For longer lifts add 2.2kg/1.5lbs per meter/foot of lift for TAH21-015, TAH21-021 and 4.4kg/3lbs for the TAH21-032 per meter/foot of lift. For pendant control add 0.4kg/0.9 lbs. for E/Stop pendant add 2.1kg/1.4lbs per meter/foot

MADE IN SOUTH AFRICA

Industrial Air Hoists TAH33



TAH33-060

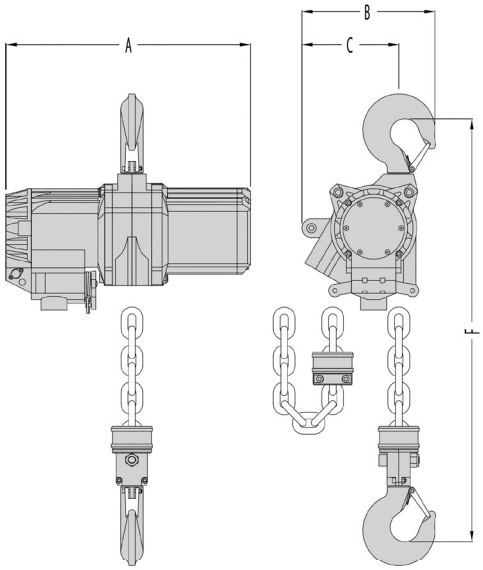

3.0t

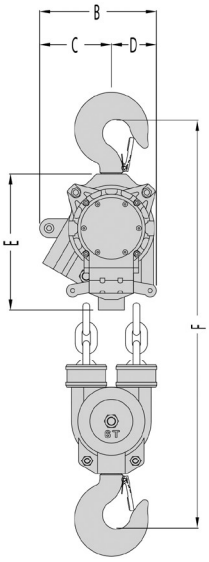

6.0t

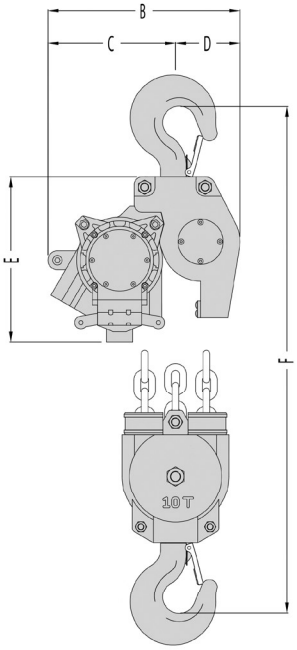

10.0t

Product Code	Capacity (tons, T)	Falls of Chain	Chain Size (mm)	Total Weight (kg*, lbs)	Full Load Lifting Speed (m/min, ft/min) @ 6 bar	Full Load Lifting Speed (m/min, ft/min) @ 4 bar	No Load Lifting Speed (m/min, ft/min) @ 6 bar	Full Load Lowering Speed (m/min, ft/min) @ 6 bar	No Load Lowering Speed (m/min, ft/min) @ 6 bar	Air Con-sump-tion (m^3/min, cfm) @ 6 bar	Air Con-sump-tion (m^3/min, cfm) @ 4 bar	Air Connection		Supply Hose (Inside Ø) (mm, in)	Sound Level (dB(A))		Dimensions (mm, in)					
												Toggle & Pilot Pendant Control	E/Stop Pilot Pendant Contro		Full Load Lifting @ 6bar	Full Load Lowering @ 6bar	A	B	C	D	E	Min F
TAH33-030	3.0, 3.3	1	13x36	76.5, 169	5.3, 17	3.8, 12	7.5, 25	8.3, 27	6.8, 22	4.0, 142	2.6, 92	NPT1	NPT¾	25, 1	81	83	466, 18.3	254, 10	185, 7.3	-	-	538, 21.1
TAH33-060	6.0, 6.6	2	13x36	99.5, 219	2.6, 8.5	1.9, 6.25	3.7, 12	4.1, 13.5	3.4, 11	4.0, 142	2.6, 92	NPT1	NPT¾	25, 1	81	83	466, 18.3	223, 8.8	137, 5.4	86, 3.4	259, 10.2	630, 24.8
TAH33-103	10.0, 11.0	3	13x36	139.5, 308	1.6, 5.25	1.1, 3.5	2.4, 7.8	2.6, 8.5	2.2, 7	4.0, 142	2.6, 92	NPT1	NPT¾	25, 1	81	83	466, 18.3	366, 14.4	243, 9.6	123, 4.9	315, 12.4	786, 31

*Weight of TAH33 model includes 3m/10' lift, 2m/6.5' toggle control. For longer lifts add 3.8kg/2.5lbs per meter/foot of lift for TAH33-030, 7.6kg/5.1lbs for the TAH33-60 and 11.4kg/7.7lbs for the AH-103 per meter/foot of lift. For pendant control add 0.8kg/0.5lbs.

Industrial Air Hoists TAH52



TAH52-160

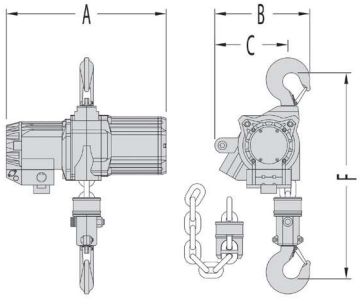

5.0t

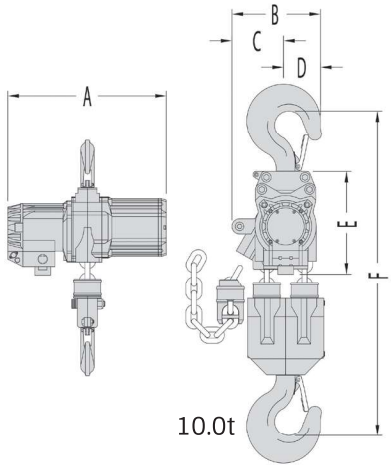

10.0t

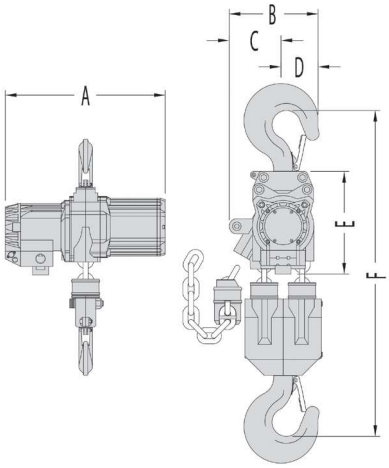

16.0 and 20.0t

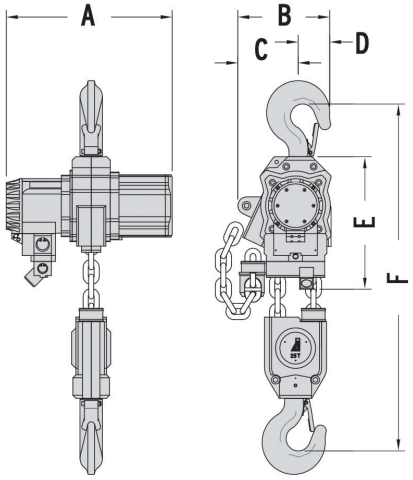

25.0 & 30.0t

Product Code	Capacity (tons, T)	Falls of Chain	Chain Size (mm)	Total Weight (kg*, lbs)	Full Load Lifting Speed (m/min, ft/min) @ 6 bar †	Full Load Lifting Speed (m/min, ft/min) @ 4 bar †	No Load Lifting Speed (m/min, ft/min) @ 6 bar †	Full Load Lowering Speed (m/min, ft/min) @ 6 bar †	No Load Lowering Speed (m/min, ft/min) @ 6 bar †	Air Con-sump-tion (m^3/min, cfm) @ 6 bar	Air Con-sump-tion (m^3/min, cfm) @ 4 bar	Air Connection		Supply Hose (Inside Ø) (mm, in)	Sound Level (dB(A))		Dimensions (mm, in)					
												Toggle & Pilot Pendant Control	E/Stop Pilot Pendant Contro		Full Load Lifting @ 6bar	Full Load Lowering @ 6bar	A	B	C	D	E	Min F
TAH52-050	5.0, 5.5	1	16x45	106, 234	3.0, 9.8	1.9, 6.2	4.0, 13	4.4, 14.4	3.3, 10.8	4.0, 141.3	2.6, 91.8	NPT1	NPT¾	25, 1	82	83	503, 19.8	300, 11.8	230, 9.1	-	-	600
TAH52-102	10.0, 11	2	16x45	152, 335	1.5, 4.9	0.9, 3	2.0, 6.5	2.2, 7.2	1.7, 5.6	4.0, 141.3	2.6, 91.8	NPT1	NPT¾	25, 1	82	83	503, 19.8	270, 10.6	170, 6.7	100, 3.9	286, 11.3	790, 31.1
TAH52-160	16, 17.6	3	16x45	245, 540	0.9, 3	0.6, 2	1.1, 3.6	1.3, 4.2	1.0, 3.3	4.0, 141.3	2.6, 91.8	NPT1	NPT¾	25, 1	82	83	616, 24.3	290, 11.4	180, 7.1	110, 4.3	325, 12.8	905, 35.6
TAH52-200	20, 22	4	16x45	288, 635	0.7, 2.3	0.4, 1.3	0.9, 3	1.0 3.2	0.8, 2.6	4.0, 141.3	2.6, 91.8	NPT1	NPT¾	25, 1	82	83	616, 24.3	280, 11.0	165, 6.5	115, 4.5	325, 12.8	920, 36.2
TAH52-300	30, 33	2	23.5x66	575, 1268	1.1, 3.6	0.8, 2.6	2.5, 8.2	2.8, 9.2	2.0, 6.6	6.5, 229.5	4.4, 155.4	NPT1	NPT¾	35, 1-3/8"	82	83	762, 30	422, 16.6	277, 10.9	145, 5.7	605, 23.8	1290 50.8

*Weights of TAH52 model includes 3m/10' lift, 2m/6.5' toggle control. For longer lifts, add 5.7kg/12.6lbs per meter/foot of lift for model TAH52-050. Add 11.4kg/25.1lbs per meter/foot of lift for the TAH52-102. Add 17.1kg/37.7lbs per meter/foot of lift for the TAH52-160. Add 22.8kg/50.3lbs per meter/foot of lift for the TAH52-200, and add 24.6kg/54.23lb for the TAH52-300. *For pendant control add 0.8kg/1.8lbs

MADE IN SOUTH AFRICA