Air Monorail Trolley Hoists



Tiger air monorail trolley hoists are designed for, and proven in, many industries including mining, shipyards, offshore construction and power stations. They are also used for industrial and general engineering applications such as automotive plants, foundries, and heat treatment plants. The hoists operate at air pressures of between 4 and 6 bar. They comply with the requirements of ASME B30.16 and EN14492-2. Our manufacturing facility is ISO9001 certified.

- Range - 10 tonne, 16 tonne and 20 tonne
- Reliable, fast, efficient, quiet and lightweight
- Greater than 5:1 factor of safety

Features of Tiger Air Monorial Trolley Hoists

Safety
Anti-fall, anti-derailment and anti-tilt features are standard throughout the range.

Load Limiter
Integral differential pressure load limiting valve automatically prevents the operator lifting a load of more than 125% of the working load limit. Load limiter is 100% repeatable at all working pressures and does not wear or generate damaging heat.

Emergency Stop
All monorail hoists are supplied with main line emergency stop as standard. This shuts off the main air supply to the hoist and traverse motors when activated.

Temperature Range
Ambient temperature range -20ºC to +70ºC (for temperatures outside of this range please contact us for details).

Precise Control
Accurate and precise positioning of loads is standard for all models.

Fail Safe Disc Brake
Non-asbestos self-adjusting disc brake is applied automatically when the air supply to the hoist is shut off. The brake is self-adjusting for the life of the brake and can hold more than 125% of the working load limit.

Product Code	Capacity (tons, T)	Falls of Chain	Chain Size (mm)	Beam Width Range (mm, in)	Min. Headroom (mm, in)	Full Load Lifting Speed (m/min, ft/min)	No Load Lifting Speed (m/min, ft/min)	Full Load Lowering Speed (m/min, ft/min)	No Load Lowering Speed (m/min, ft/min)	Air Consump-tion (m^3/min, cfm)	Air Connection	Supply Hose (Inside Ø) (mm, in)	Sound Level (dB(A))	Total Weight (kg*, lbs)
MTH-102	10.0, 11.0	2	16x45	150-300, 5.9-11.8	685, 26.9	1.5, 4.9	2.0, 6.6	2.2, 7.2	1.7, 5.6	4.0, 141	G¾	25, 0.98	83	375, 827
MTH-160	16.0, 16.25	3	16x45	150-300, 5.9-11.8	740, 29.1	0.9, 2.9	1.1, 3.6	1.3, 4.3	1.0, 3.3	4.0, 141	G¾	25, 0.98	83	570, 1257
MTH-200	20.0, 22.04	4	16x45	150-300, 5.9-11.8	780, 30.7	0.7, 2.3	0.9, 2.9	1.0, 3.3	0.8, 2.6	4.0, 141	G¾	25, 0.98	83	595, 1312

* For larger beam widths than shown here, contact the factory

All diagram measurements are imperial

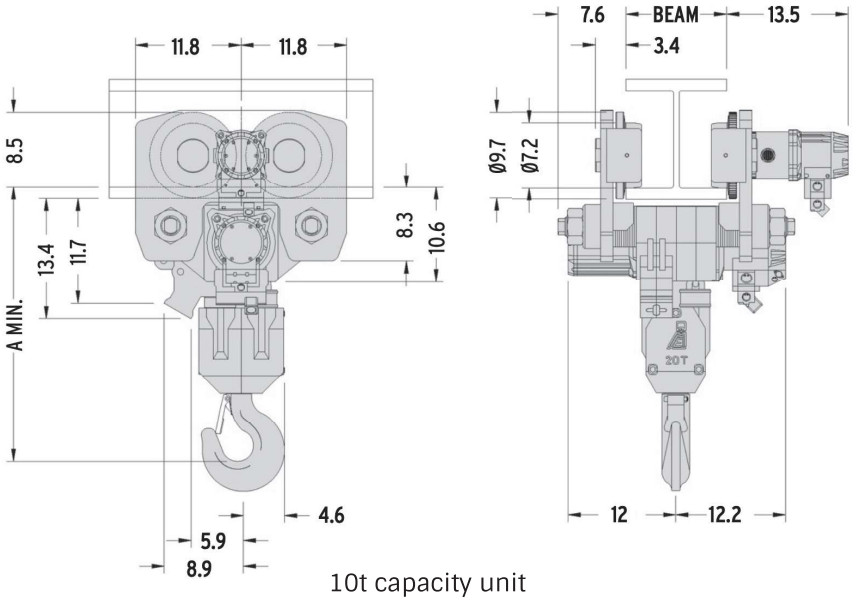

10t capacity unit

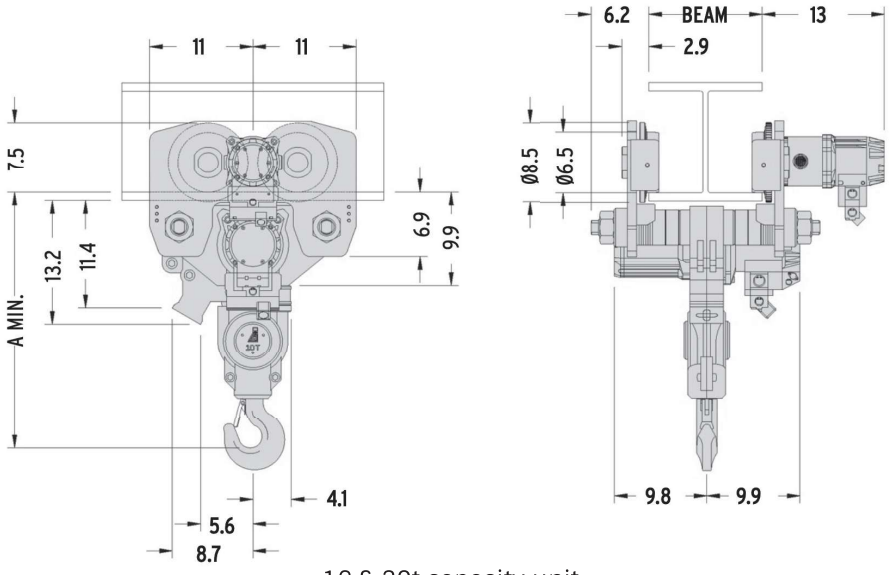

16 & 20t capacity unit